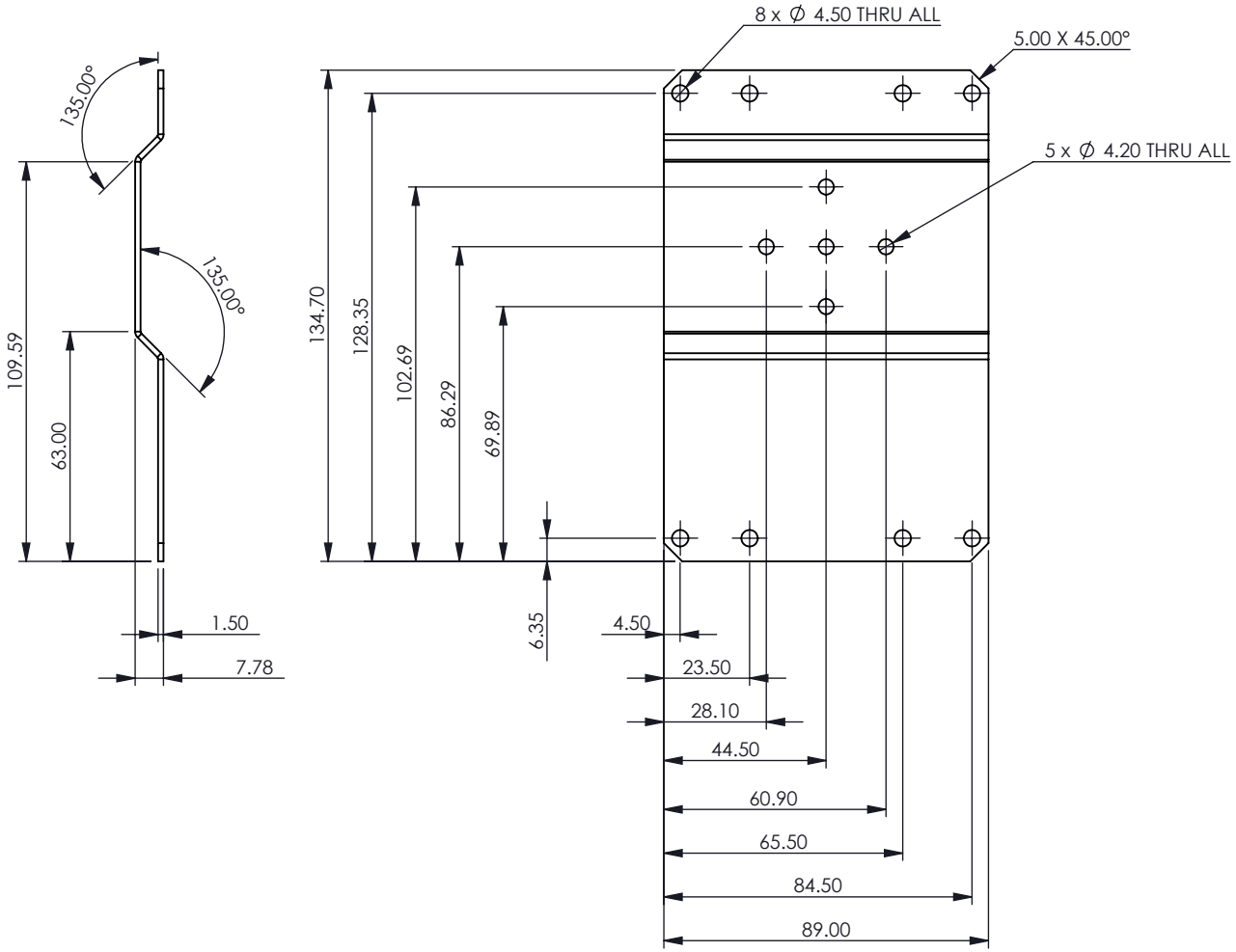

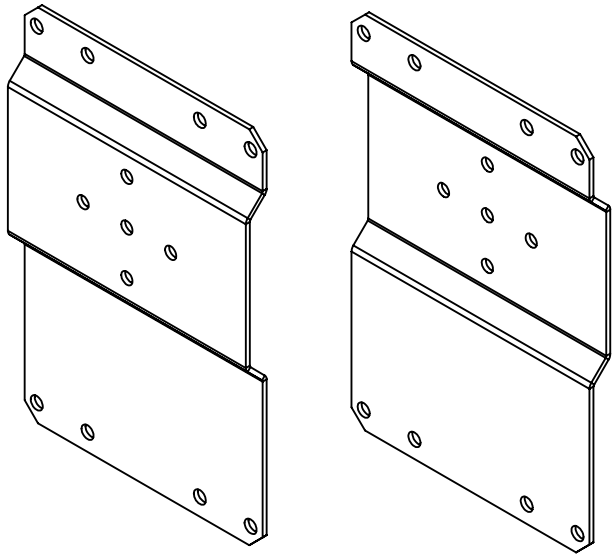

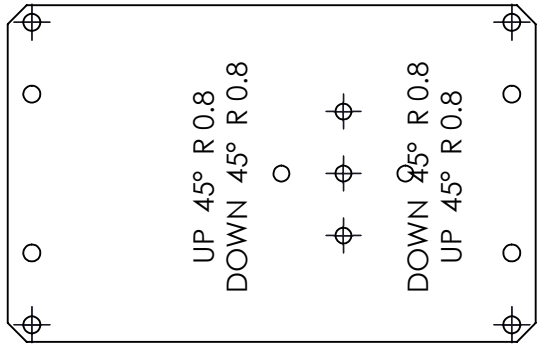

FLAT PATTERN
(FOR REFERENCE
PURPOSES ONLY)

NOTES:
1. MATERIAL 5251 H22 ALUMINIUM.
2. REMOVE AND DEBURR ALL SHARP EDGES.
3. PARTS MUST BE FREE OF OIL, GREASE & OTHER FOREIGN MATERIALS.
4. FINISH - CLEAR ANODISE 5-15um TO ISO 7599.

REV	ECN #	PREPARED	DATE	CHECKED	DATE
------	------	------	------	------	------
------	------	------	------	------	------
------	------	------	------	------	------
------	------	------	------	------	------
------	------	------	------	------	------

TOLERANCES unless otherwise stated according to DIN ISO 2768-1/-2 CLASS m/K. ALL DIMENSIONS IN mm.	MATERIAL 5251 H22 ALUMINIUM	DOCUMENT NO.	TITLE			TITLE (SHORT FORM)	EXCELSYS TECHNOLOGIES LTD.
		61693r00	GENERIC DINRAIL LOCATING FIXTURE			----	27 EASTGATE DRIVE, EASTGATE BUSINESS PARK, LITTLE ISLAND, CORK, IRELAND. (T) +353 21 4354716 (F) +353 21 4354864 (WEB) www.excelsys.com
	FINISH CLEAR ANODISE		PREPARED	DATE	CHECKED	DATE	RELEASED	DATE
	SCALE: NOT TO SCALE	ORIGINAL :	TH	21/10/15	--------	-----	--------	-----
							PAGE OF -----

This document and its contents are the copyright property of Excelsys Technologies Ltd. and may not be copied in whole or in part without written permission.